GALAGINO V3.0

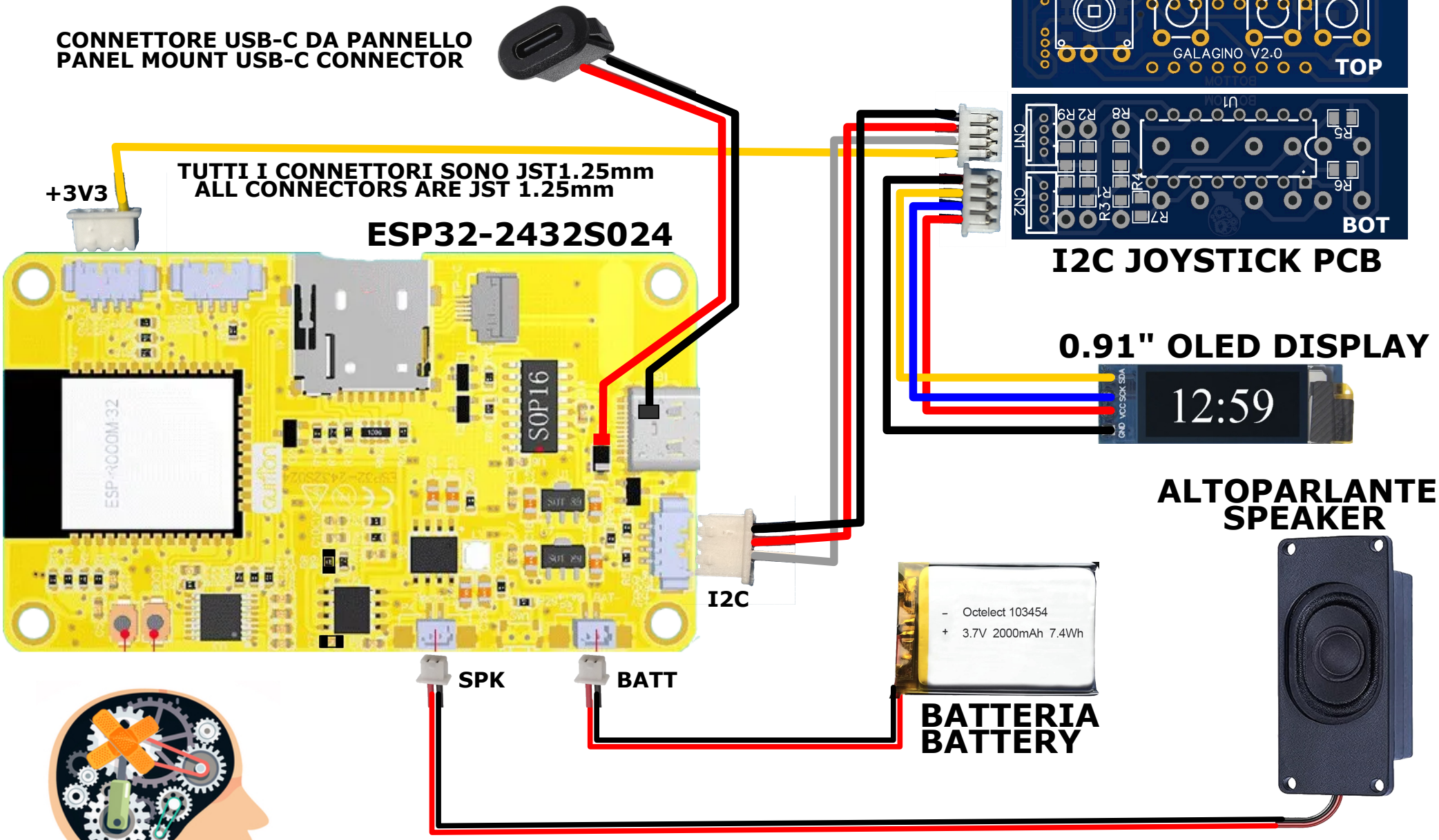

www.survivalhacking.it

TITLE: Galagino V3.0 - Schema pratico / Practical schematic		REV: 1.0
	Company: Survival Hacking	Sheet: 1/1
	Date: 2026-02-01 Drawn By: Davide Gatti	